Data Sheet

Article number: 2310310925
Description: E+G Levelling element w/no-slip disc
LV.A-125-ACV-AS-M20x186

Measures

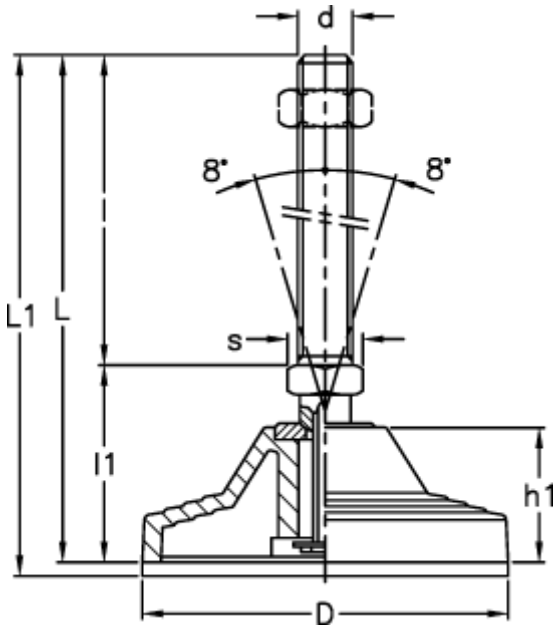

D	= 125	s = 24
d	= M20	
h	= 45	
l	= 186	
L	= 250	
l1	= 64	
L1	= 260	
Max load (N)	= 40000	

Product drawings and brochures of any kind may contain errors for which Brd. Klee A/S cannot be liable.